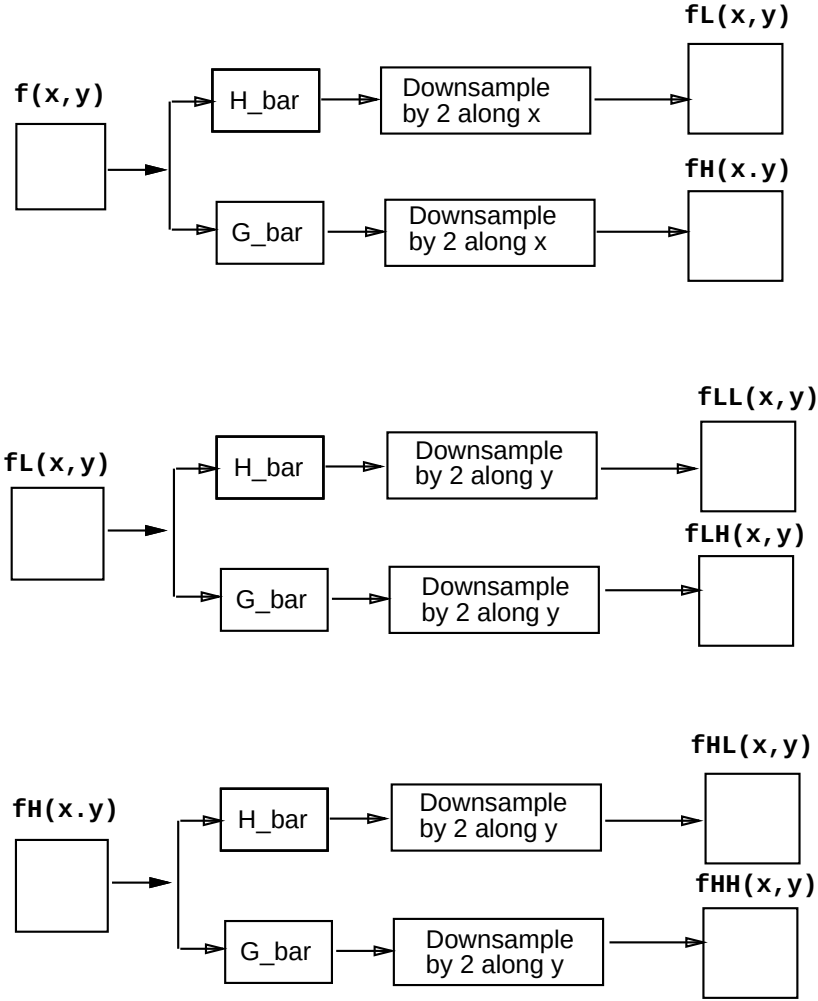
f(x,y)
H_bar
Downsample by 2 along x
fL(x,y)
G_bar
Downsample by 2 along x
fH(x.y)
fL(x,y)
H_bar
Downsample by 2 along y
fLL(x,y)
G_bar
Downsample by 2 along y
fLH(x,y)
fH(x.y)
H_bar
Downsample by 2 along y
fHL(x,y)
G_bar
Downsample by 2 along y
fHH(x,y)