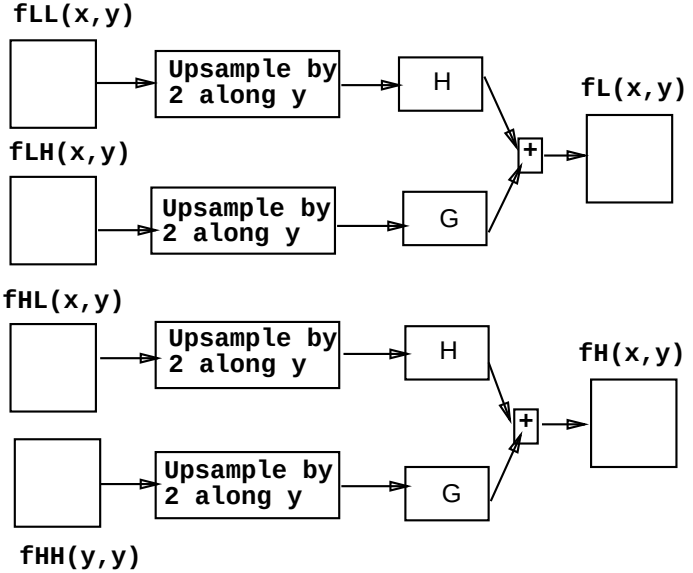
fLL(x,y)
Upsample by 2 along y
H
fL(x,y)
+
fLH(x,y)
Upsample by 2 along y
G
fHL(x,y)
Upsample by 2 along y
H
fH(x,y)
+
Upsample by 2 along y
G
fHH(y,y)

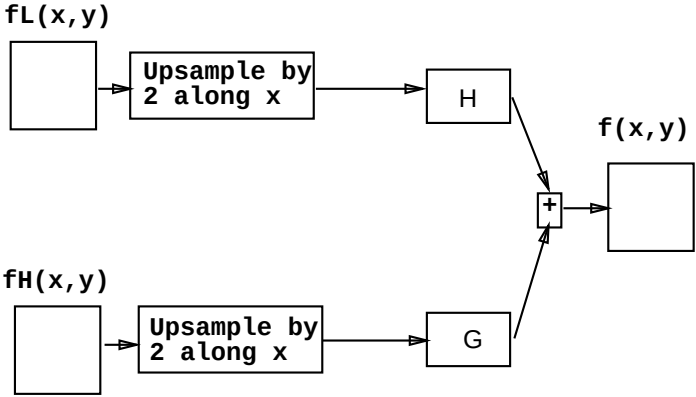
fL(x,y)
Upsample by 2 along x
H
f(x,y)
+
fH(x,y)
Upsample by 2 along x
G