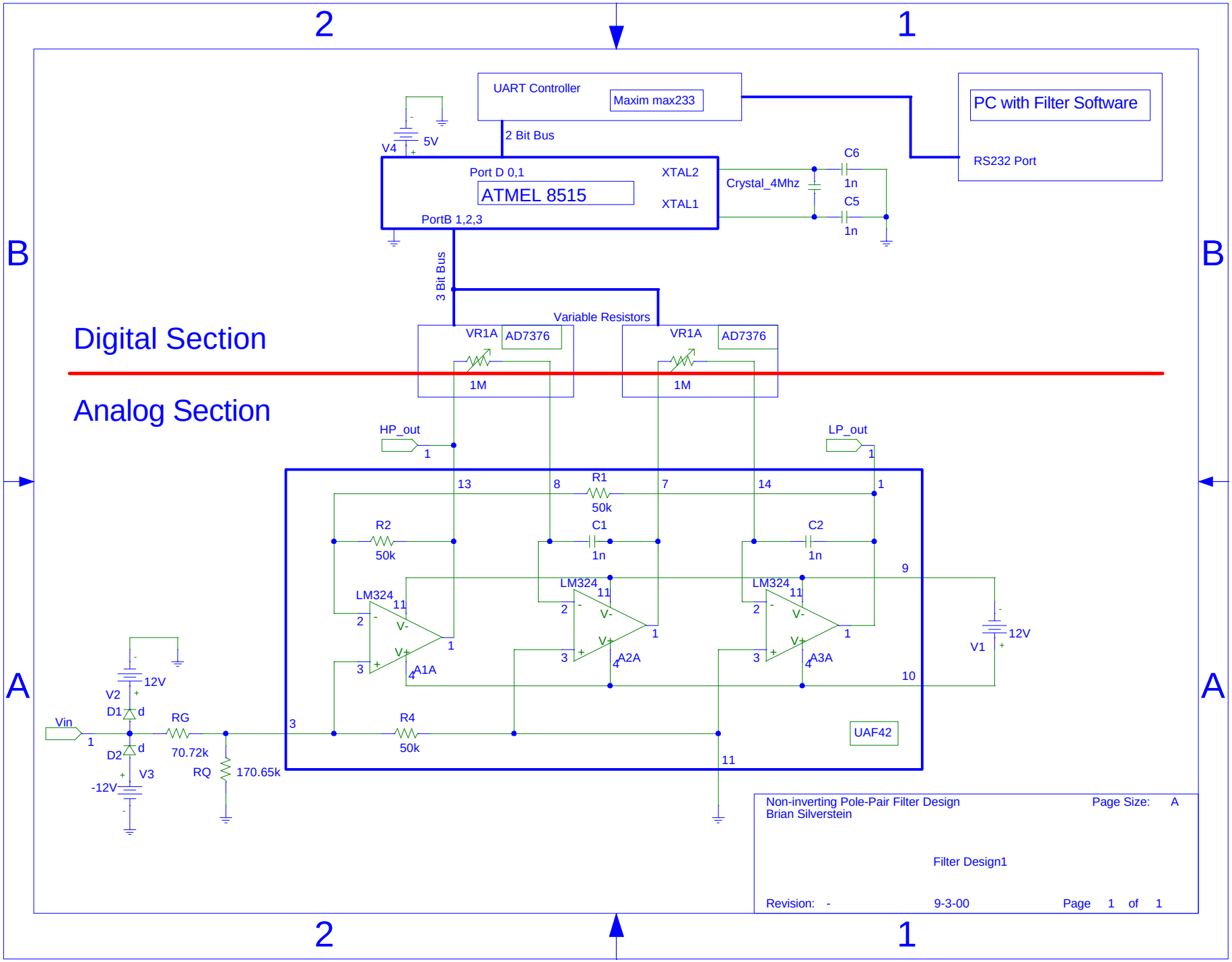
UART Controller
Maxim max233
PC with Filter Software
RS232 Port
2 Bit Bus
V4
5V
Port D 0,1
ATMEL 8515
XTAL2
XTAL1
PortB 1,2,3
Crystal_4Mhz
C6
1n
C5
1n
3 Bit Bus
Variable Resistors
VR1A
AD7376
1M
VR1A
AD7376
1M
Digital Section
Analog Section
HP_out
LP_out
R1
50k
R2
50k
C1
1n
C2
1n
LM324
A1A
A2A
A3A
V1
12V
V2
12V
D1
D2
Vin
RG
70.72k
RQ
170.65k
V3
-12V
R4
50k
UAF42
Non-inverting Pole-Pair Filter Design
Brian Silverstein
Page Size: A
Filter Design1
Revision: -
9-3-00
Page 1 of 1